SPARES – PARTS LIST
PRESSURE WHEEL DRIVE

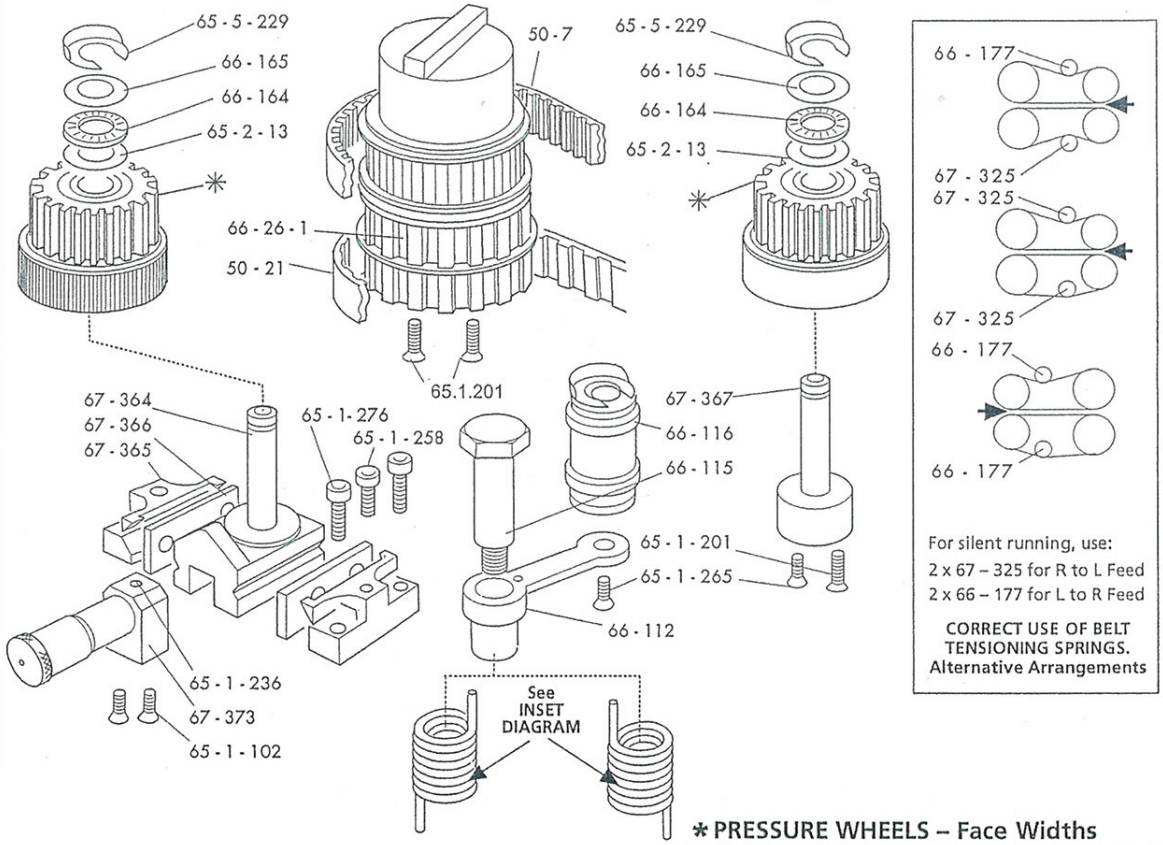

*** PRESSURE WHEELS – Face Widths**

67-368	Fine knurl	6mm	67-372	Ribbed (set)	6mm
67-369	Plain	6mm	67-375	Fine knurl	9mm
67-370	Coarse knurl	6mm	67-376	Fine knurl	12mm
67-371	Wavy line (set)	6mm	67-378	Plain	9mm
			67-379	Plain	12mm

PART No.	DESCRIPTION	PART No.	DESCRIPTION
50-7	Belt – Pressure wheel drive	66-116	Pulley and shaft assembly idler pulley
50-21	Belt – Main carrying	66-164	Bearing, thrust – Pressure wheels
65-1-201	Screws	66-165	Bearing, thrust plate – Pressure wheels
65-1-236	Screws, locking – one per set	66-177	Spring, torsion – Left hand belt tensioner
65-1-246	Screws – two per set	67-325	Spring, torsion – Right hand belt tensioner
65-1-265	Screw – one per hand	67-364	Block and shaft assembly – for pressure wheels
65-1-275	Screws – two per set	67-365	Block 'V' Guide – Right and left hand pressure wheels
65-1-276	Screws – four per set	67-366	Ball cage – Pressure wheel slide
65-2-13	Shim – as required	67-367	Shaft, fixed – Pressure wheel
65-5-229	Clip, safety – one per hand	67-373	Pressure adjuster assembly
65-1-258	Screws – two per set		
66-26-1	Pulley assembly – Main drive		
66-112	Arm, Idler		
66-115	Hinge bolt		

SPARES – PARTS LIST
REAR HOUSING

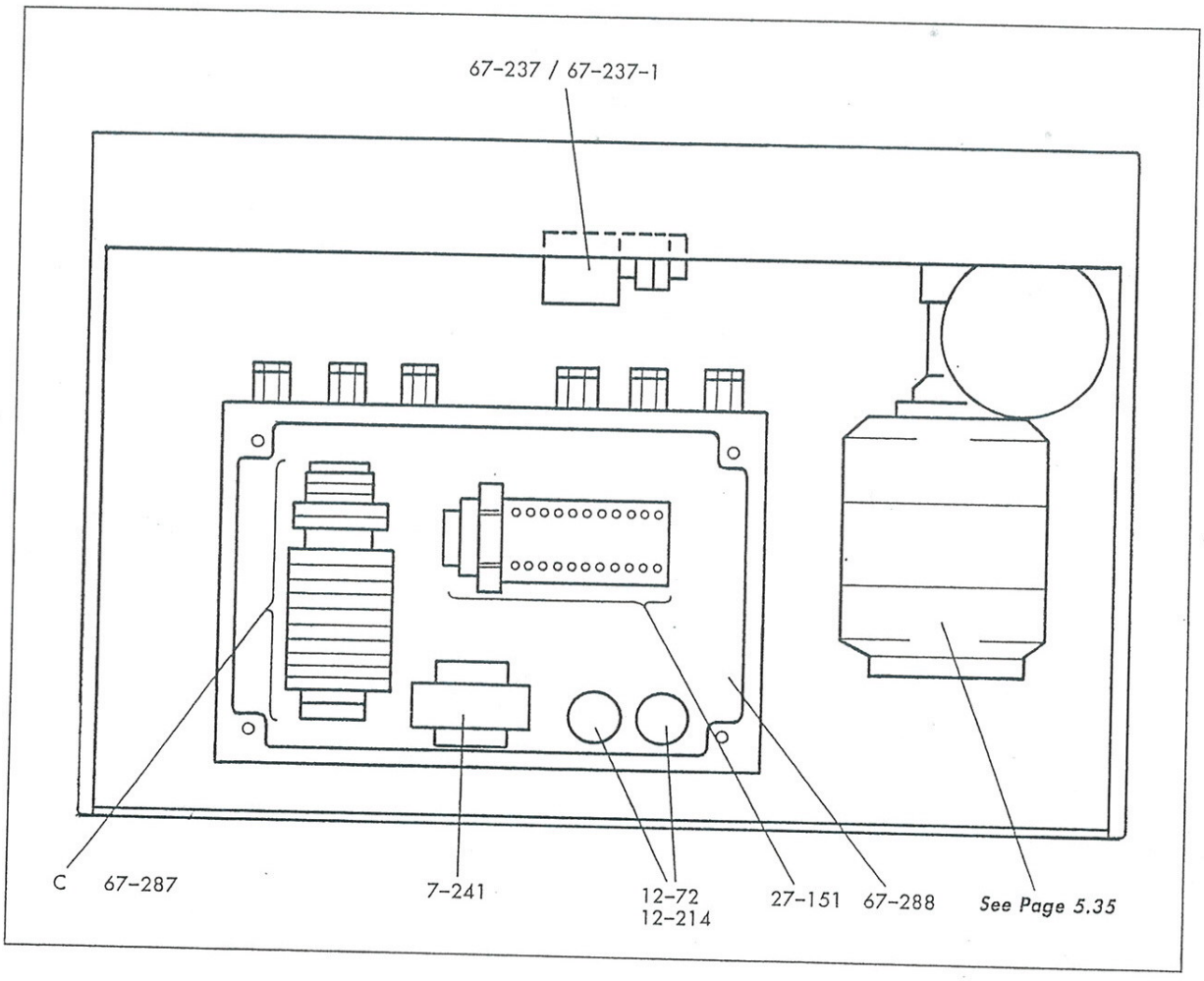

PART No.	DESCRIPTION
12-72	Capacitor - 220/240V
12-214	Capacitor - 110/115V
12-62	Motor - 110/115V
12-61	Motor - 220/240V
27-151	Reversing pair
67-203-1	Lock (not illustrated)
67-201	Cover (not illustrated)
67-299	Gas strut (not illustrated)
67-237	Miniblo unit complete 240V
67-237-1	Miniblo unit complete 110V
75-20, 75-94, 75-95	Cable glands as required

PART No.	DESCRIPTION
C- 75-215	Terminal - EK
C- 75-216	Terminal - SAK
C- 75-222	End bracket - EW35
C- 75-333	Terminal - DK4QV/35
C- 75-336	End Plate
C- 75-340	Fused terminal
C- 75-345	Terminal - ASK1
75-241	Transformer 20VA

Fuses – 240V:

75-26	F30	10A	(1)
75-115	F31,32,33,34	3.15A	(4)
75-370-08	F35,36	800MA	(3)

Fuses – 110V:

75-10	F30	15A	(1)
75-116	F31,32,33,34	5A	(4)
75-370-08	F35,36	800MA	(2)
75-130	F37	2A	(1)

SPARES – PARTS LIST

BOTTOM PLATES L.H.
Right to Left Feed

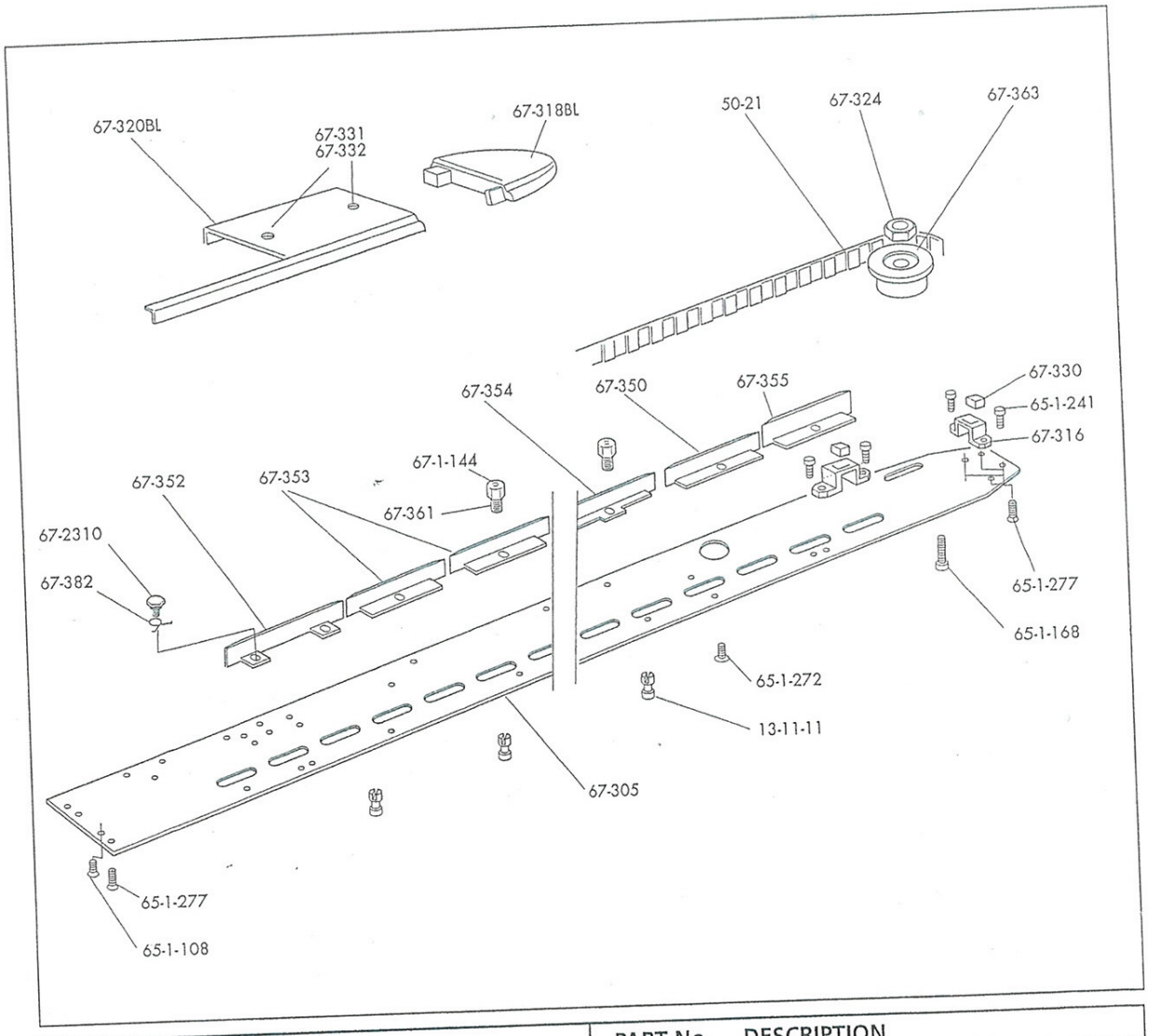

PART No.	DESCRIPTION
13-11-11	Dzus stud (3)
50-21	Belt, carrying
65-1-349	Grub screw (2)
65-1-168	Screw (1 per set)
65-1-241	Screws (4)
65-1-272	Csk. screw (4 per set)
65-1-348	Csk. screws (2 per set)
67-305	Bottom plate L.H.
67-316	Bracket, belt guard fastener (2)
67-324	Nut (1 per set)
67-330	Dzus receptacle
67-331	Dzus stud (2)
67-332	Retaining ring (2)

PART No.	DESCRIPTION
67-334	Dzus stud retainer
67-352	Pressure plate (sprung)
67-350	Pressure plate (short)
67-354	Pressure plate (short)
67-355	Pressure plate (sprung)
67-361	Adjuster body (2)
65-1-144	Adjusting screw
67-363	Pulley, plain
67-382	Spring, torsion
67-2310	Collar, spring
67-318BL	Infeed 'Vee' L.H.
67-320BL	Belt guard L.H.

SPARES – PARTS LIST

BOTTOM PLATES R.H.
R to L & L to R Feed

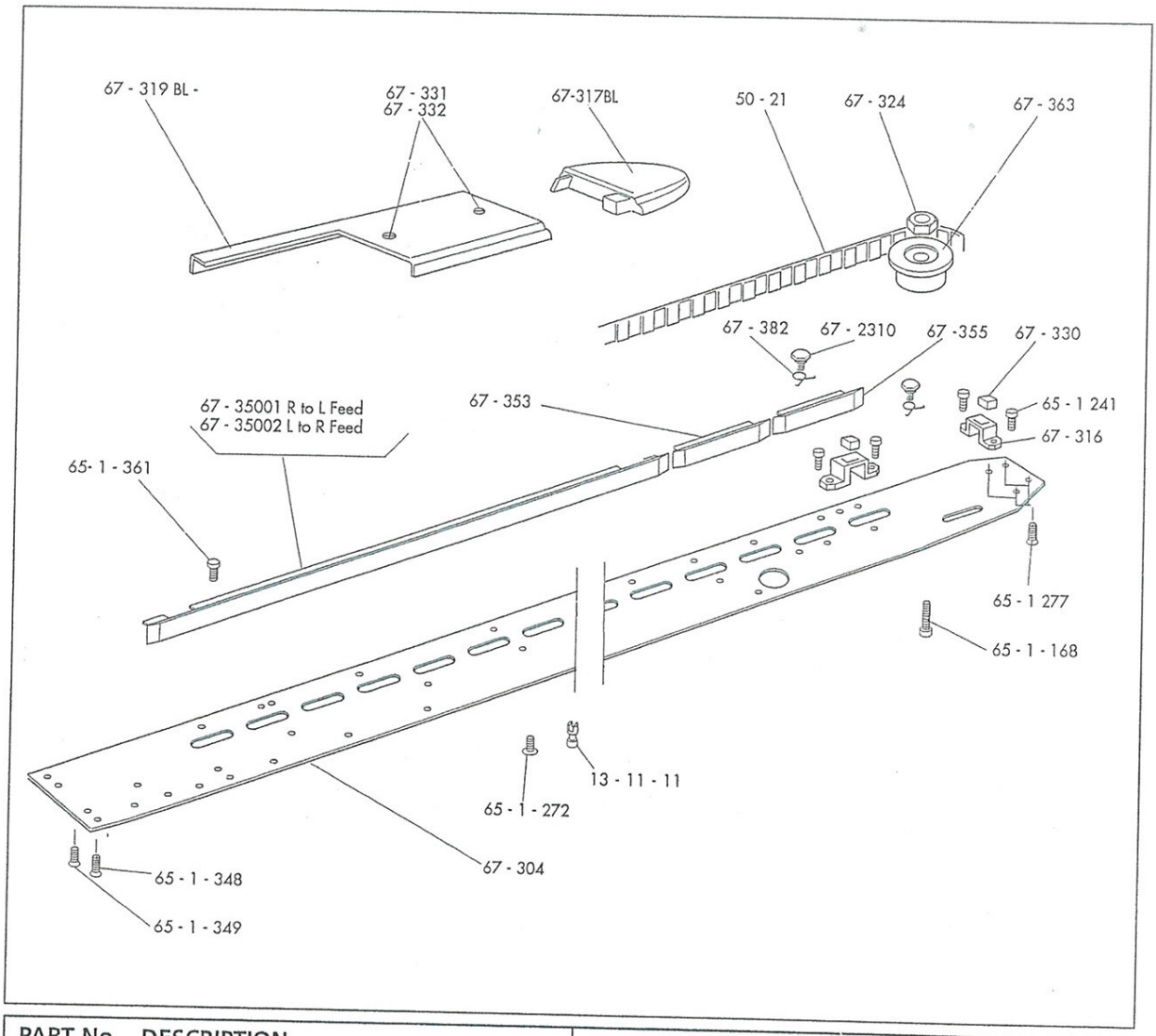

PART No.	DESCRIPTION
13-11-11	Dzus stud (3)
50-21	Belt, carrying
65-1-108	Grub screw
65-1-144	Grub screw
65-1-168	Screw (1 per set)
65-1-241	Screws (4 per set)
65-1-241	Screws (4)
67-1-272	Socket button head screw
65-1-277	Screws (4 per set)
65-1-361	Screws (5)
67-304	Bottom plate R.H.
67-316	Bracket, belt guard fastener (2)
67-317BL	Infeed 'Vee' R.H.
67-319BL	Belt guard R.H.

PART No.	DESCRIPTION
67-330	Dzus receptacle
67-331	Dzus stud (2)
67-332	Retaining ring (2)
67-324	Nut (1 per set)
67-334	Dzus stud retainer
67-35001	Pressure plate (short) - R to L feed
67-35002	Pressure plate (short) - L to R feed
67-353	Pressure plate (short)
67-355	Pressure plate (sprung)
67-361	Adjuster body (2)
67-382	Spring, torsion
67-2310	Collar, spring
67-363SS	Pulley, plain

SPARES – PARTS LIST
MAIN DRIVE

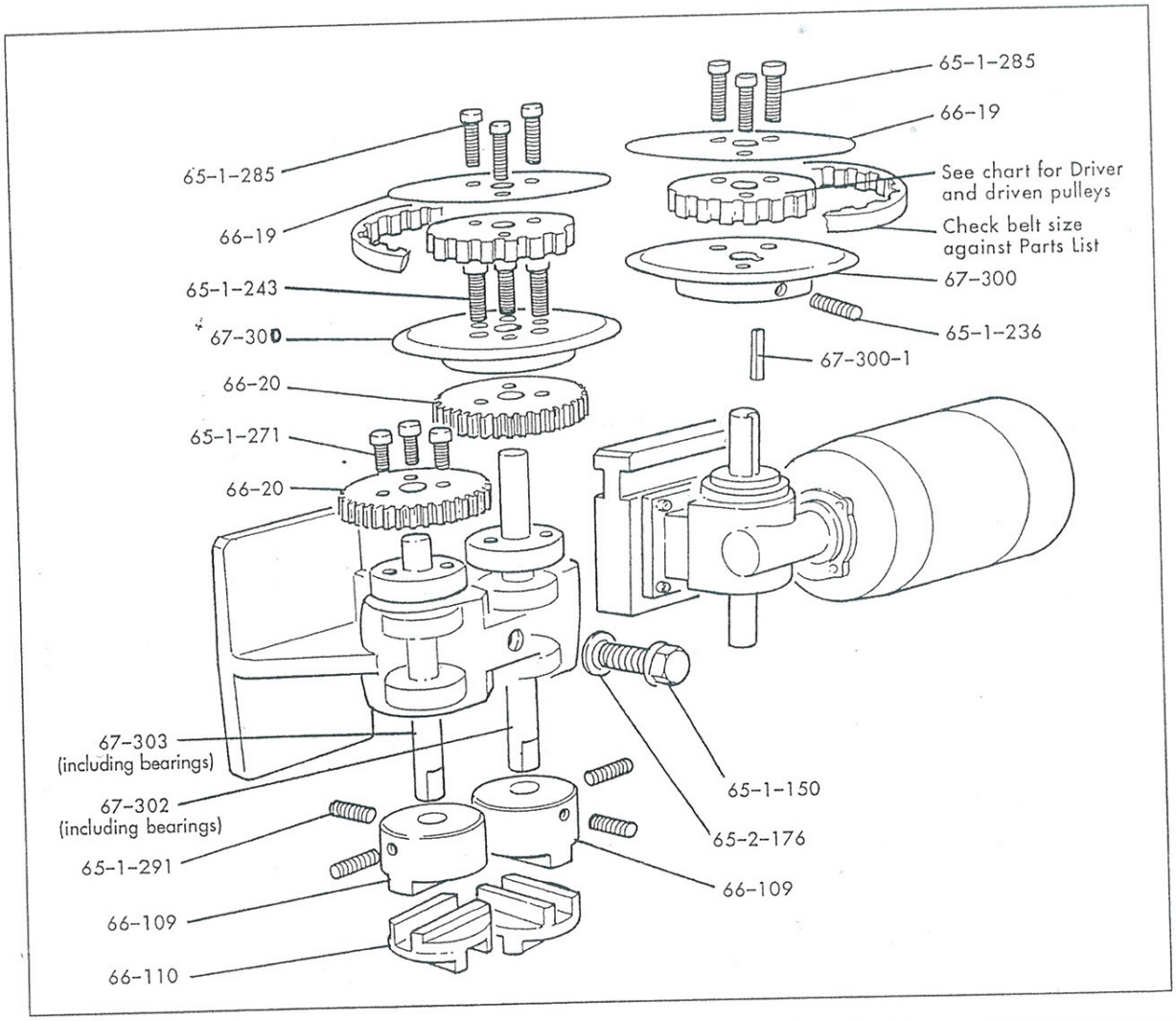

PART No.	DESCRIPTION
50-8	Belt – Main drive - 225L
50-12	Belt – Main drive - 255L
50-14	Belt – Main drive - 240L
65-1-150	Bolt – Pinch – one per set
65-1-236	Screw – set – one per set
65-1-243	Screw – three per set
65-1-271	Screw – three per set
65-1-285	Screw – three per pulley
65-1-291	Screw – two per bond
65-2-176	Washer for 65-1-150
66-19	Pulley flange - upper Driver and Driven
66-20	Gear – Main drive
66-109	Coupling – Main drive shaft upper body

PART No.	DESCRIPTION
66-110	Coupling – Main drive shaft Torque disk
67-300	Pulley flange – Lower driver
67-300-1	Key
67-302	Shaft driven – Long, including bearings
67-303	Shaft driven – Short including bearings

PULLEYS for Main Drive

66-93	14T	66-98	19T	66-103	24T
66-94	15T	66-99	20T	66-104	25T
66-95	16T	66-100	21T	66-105	26T
66-96	17T	66-101	22T	66-106	27T
66-97	18T	66-102	23T	66-107	28T

SPARES – PARTS LIST
MOTOR GEARBOX ASSEMBLY

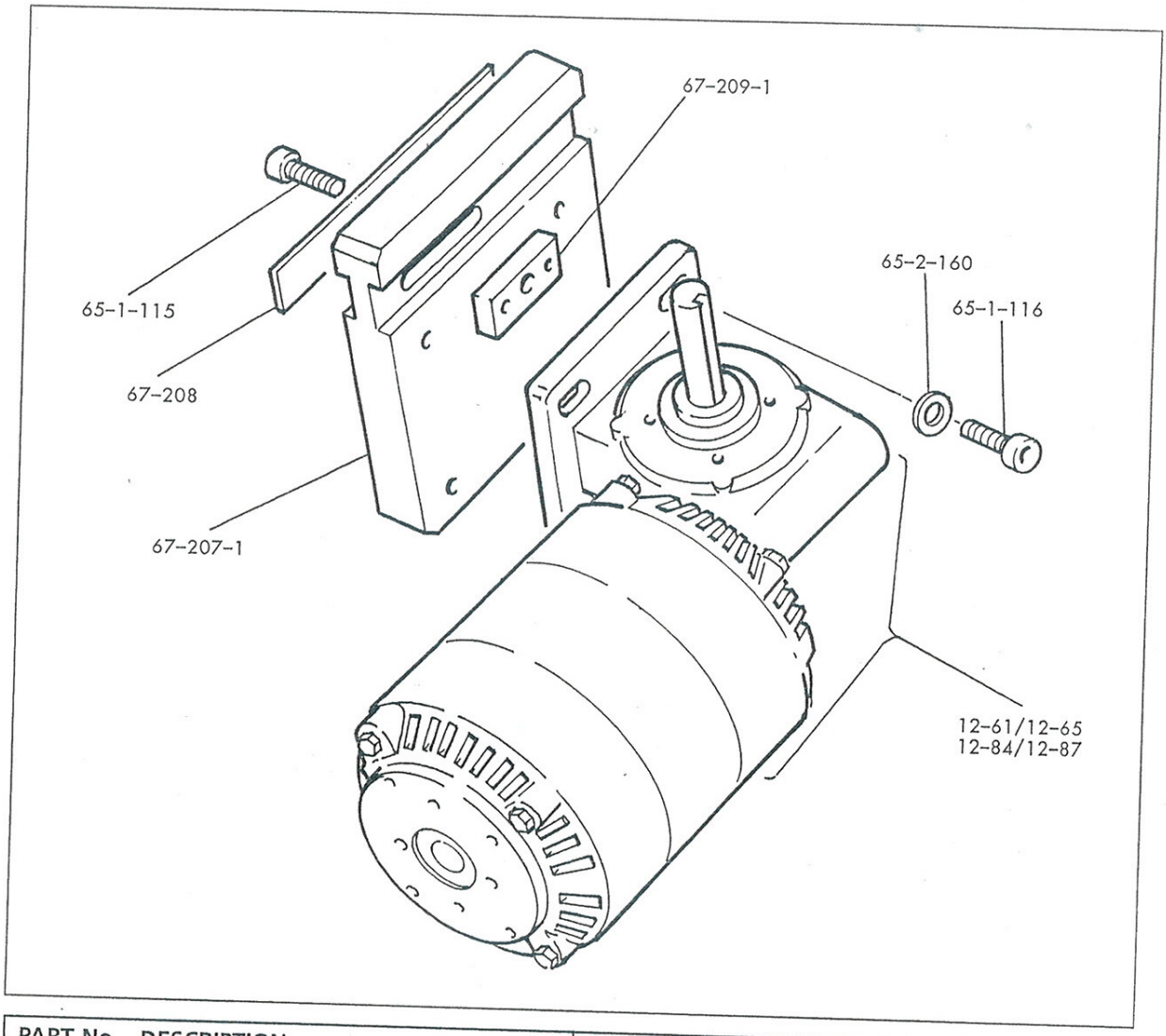

PART No.	DESCRIPTION
12-61	Motor/Gearbox unit complete 240V 56rpm (right or left hand)
12-62	Motor/Gearbox unit complete 110V 56rpm (right or left hand)
12-63	Gearbox only. 56rpm (plus oil seal and pin)
12-64	Gearbox only 96rpm (plus oil seal and pin)
12-65	Gearbox only 140rpm (plus oil seal and pin)
12-84 *	Motor/Gearbox unit complete 240V 96rpm (right or left hand)

PART No.	DESCRIPTION
12-85 *	Motor/Gearbox unit complete 110V 96rpm (right or left hand)
12-86 *	Motor/Gearbox unit complete 240V 140rpm (right or left hand)
12-87 *	Motor/Gearbox unit complete 110V 140rpm (right or left hand)
65-1-115	Screws (1)
67-207-1	Motor mounting plate
67-209-1	Locking nut
67-208	Guide bar
65-2-160	Washer (4)
65-1-116	Screw (4)

** Special order only*

SPARES – PARTS LIST
MAINFRAME

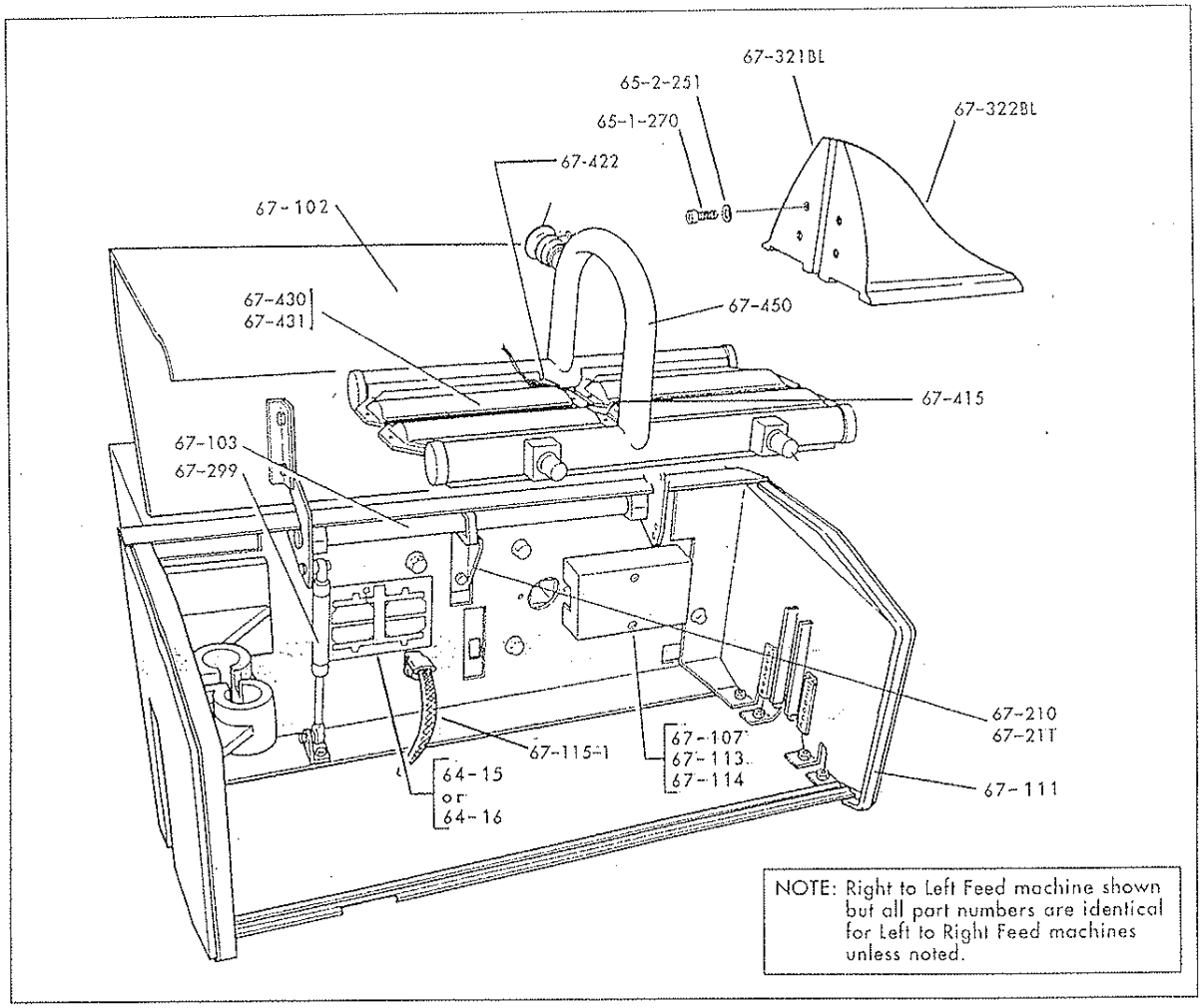

PART No.	DESCRIPTION
64-15	Label – Capsule arrangement Right to left feed machines
64-16	Label – Capsule arrangement Left to right feed machines
65-1-270	Screws – four per set
65-2-251	Washers – four per set
67-102	Cover – Hinged for mainframe
67-103	Hinge bar – Mainframe cover
67-299	Gas Strut – Mainframe cover
67-107	Cover – Heater connection plug
67-111	Edging strip – Rubber
67-113	Dzus stud – Heater conn. cover
67-114	Dzus grommet – for Stud 67-113
67-115-1	Earthing braid – for No. 1 capsule

PART No.	DESCRIPTION
67-321BL	Infeed plough moulding - Right hand side
67-322BL	Infeed plough moulding - Left hand side
67-415	Air valve
67-422	Clip – Thermo couple/capsule
67-421-1	Thermo couple - complete
67-430	Capsule assembly - 240V 325W
67-431	Capsule assembly - 110V 325W
67-210	Operating arm
67-211	Spacers
67-450	Complete air duct assembly

SPARES – PARTS LIST
BAG FEED

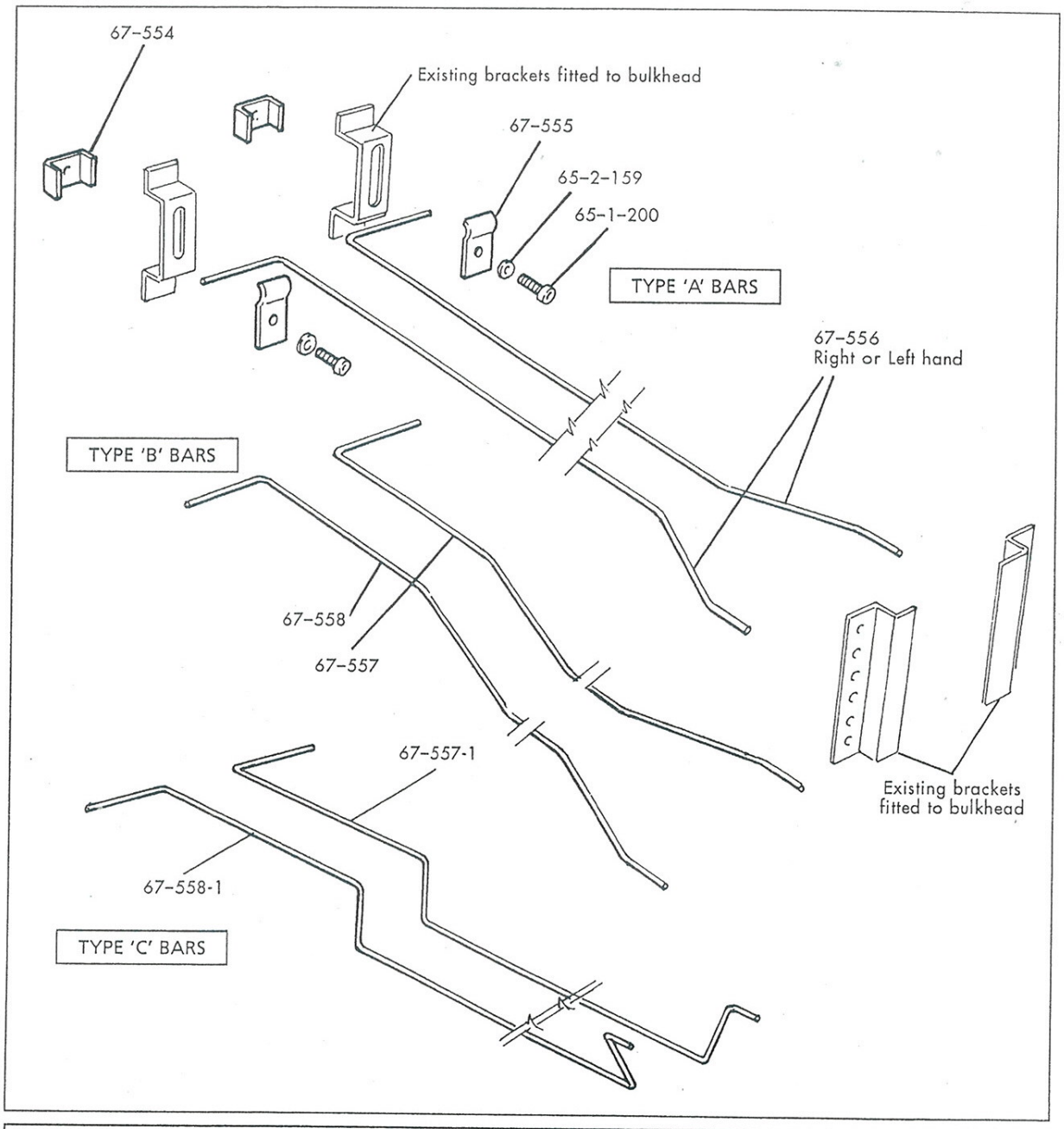

PART No.	DESCRIPTION	PART No.	DESCRIPTION
65-1-200	Screw (two per set)	67-557	Guide bar – Type 'B' - cranked Right hand
65-2-159	Washer (two per set)	67-558	Guide bar – Type 'B' - cranked Left hand
67-554	Clamp nut (two per set)	67-557-1	Guide bar – Type 'C' - cranked Right hand
67-555	Guide clamp (two per set)	67-558-1	Guide bar – Type 'C' - cranked Left hand
67-556	Guide bar - Type 'A' - straight Right or Left hand		

SPARES – PARTS LIST
CONTROL PANEL

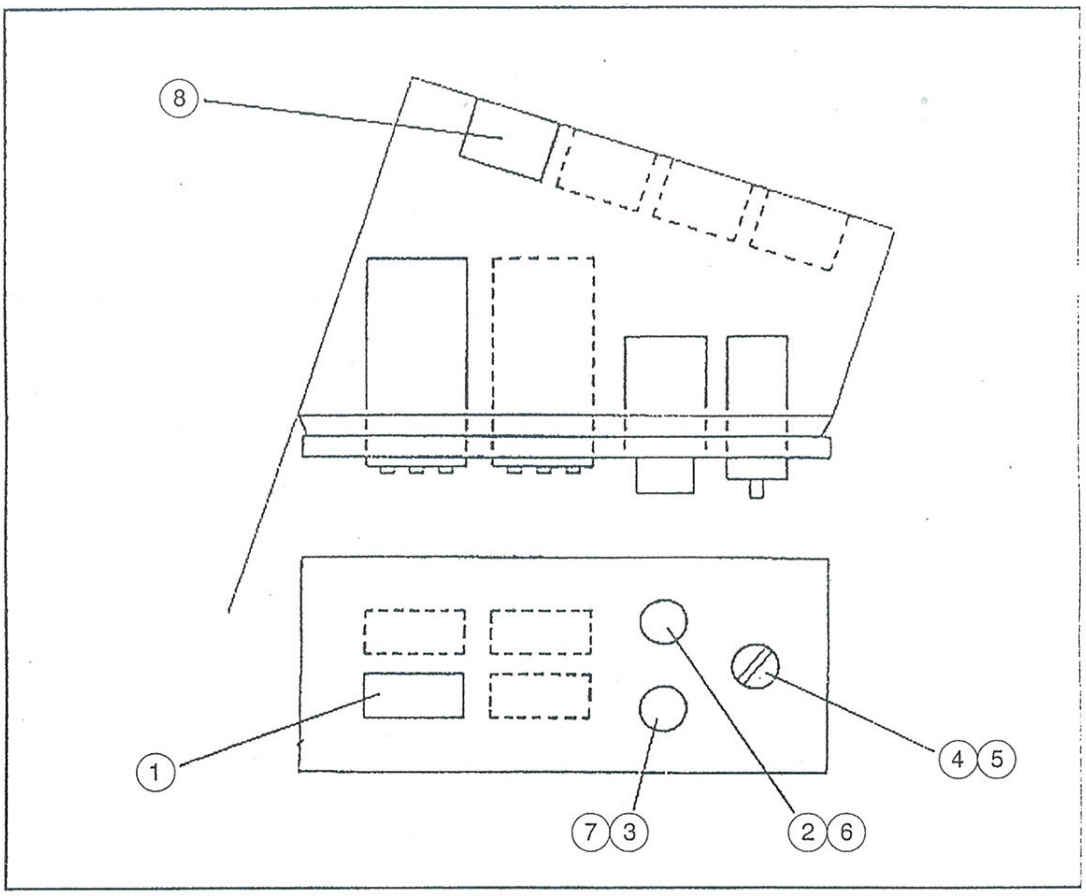

ITEM	PART No.	DESCRIPTION
1	67-913	P.I.D. controller
2	27-141.1	Red push button
3	27-142.1	Yellow push button
4	27-143.2	Green select switch
5	75-327.1	Green Lamp Holder
6	75-327.2	Red Lamp Holder
7	75-327.3	Yellow Lamp Holder
8	67-908.3	Solid state relay (1 per P.I.D)
9	75-77	Spare bulb (3)